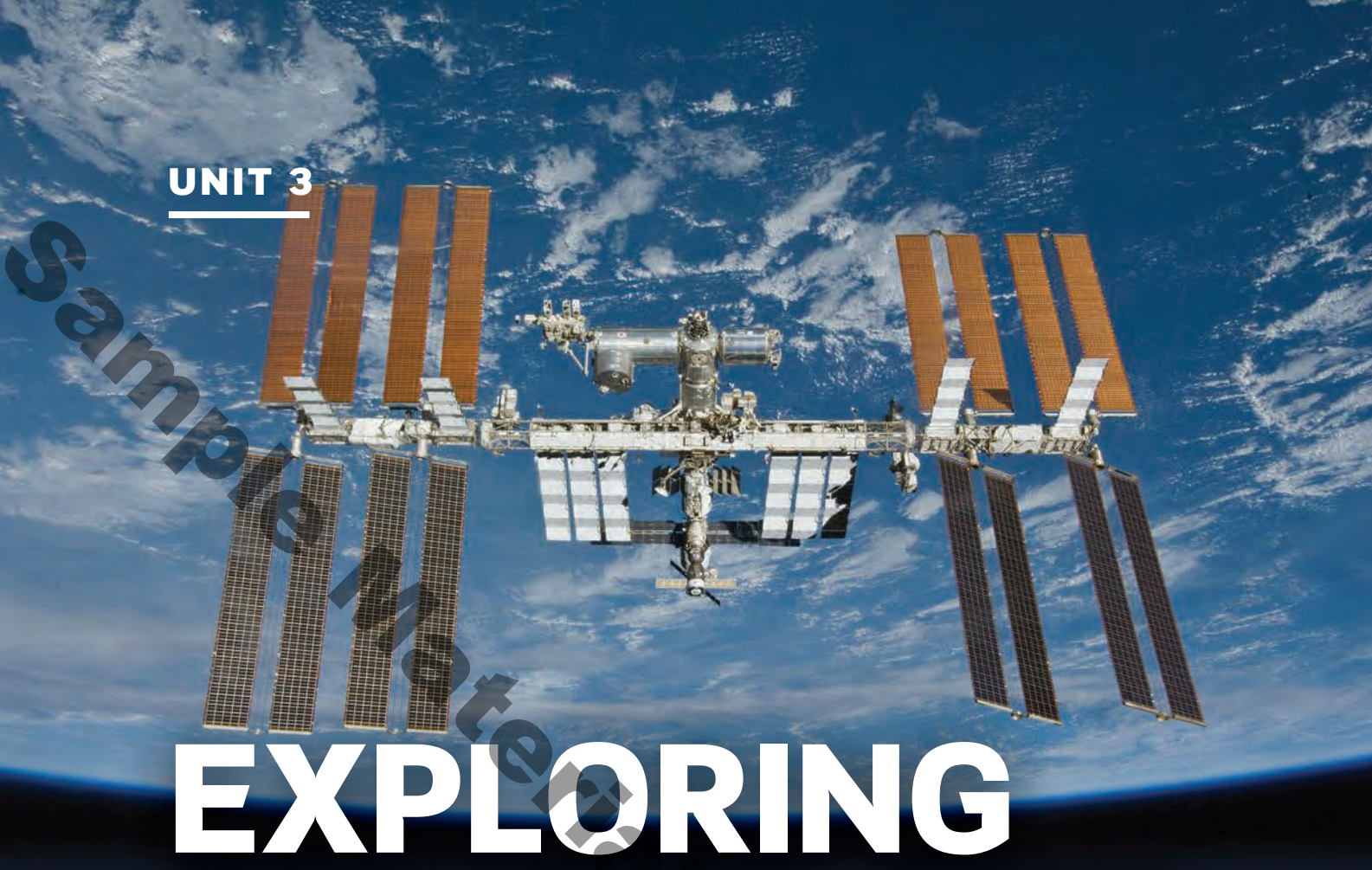

UNIT 3

EXPLORING TECHNOLOGY

Sample Material © Pearson 2023

THINK ABOUT THIS

How has technology changed the world?

Technology includes all kinds of tools and machines, things as simple as a spoon or as complex as the international space station. It also includes skills, from using fire to making a film. Write examples of important technology in the chart.

Technology That Has Changed the World

CHAPTER 9

A History of Telling Time

Sand falling through an hourglass

LEARNING OUTCOME

› Learn what people throughout history have done to tell time

GETTING READY TO READ

Talk about these questions with your class.

1. How many people in the class wear a watch? What other ways are there to find out the time?
2. How many times a day do you look to see what time it is? What is the average for the class?
   a. 0–5 b. 5–10 c. more than 10
3. Do you agree with either of these ideas? Explain.
   a. Life without clocks would be beautiful.
   b. Life without clocks would be terrible.

Sample Material © Pearson 2023

READING

Read to Find Out: What has *not* changed in the way that people measure time?

Look at the pictures, words, and definitions next to the reading. Then read without stopping. If you see a new word, try to understand the sentence without it. You will learn the word later.

A History of Telling Time

1 No one knows when people first thought about **measuring** time. We do know that they measured it by the sun, moon, and stars, and that they first divided time into months, seasons, and years. Later, they began dividing the day into parts, like hours and minutes, and they developed simple **technology** to help them do this. Today, we have much more **advanced** ways to tell time, and we can measure even tiny parts of a second. A great many things have changed in how people tell time—but not everything.

2 The Sumerians, who lived in the area of present-day Iraq, were the first to divide the day into parts. Then, five or six thousand years ago, people in North Africa and the Middle East developed ways to tell the time of day. They needed some kind of clock because by then they had organized religious and social activities to **attend**. That meant people needed to plan their days and **set** times for these events.

3 Among the first clocks were Egyptian obelisks.[1] The Egyptians used the movement of an obelisk's **shadow** to divide the day into morning and afternoon. Later, they placed stones on the ground around the obelisk to mark **equal** periods of time during the day, the way that numbers do on the face of a clock. That worked **fairly** well, but people could not carry obelisks with them. They needed something **portable**. So the Egyptians invented a kind of sundial[2] that is now called a shadow clock. It came into use about 3,500 years ago, around 1500 BCE.[3]

4 There were many types of sundials in Egypt and in other areas around the Mediterranean Sea. All of them, of course, depended on the sun, which was no help in telling time at night. Among the first clocks that did not depend on the sun were water clocks. There were various types of these, too. Some were designed so that drops of water would fall at a constant rate (an unchanging speed) from a tiny hole in the bottom of a container. Others were designed to have a container slowly fill with water, again at a constant rate. It took a certain amount of time for the container to fill up or empty out. However, the flow of water was hard to control, so these clocks were not very **accurate**, and people still did not have a clock they could put in their pocket. Hourglasses filled with sand had similar problems.

[1] *an obelisk*

[2] *one kind of sundial*

[3] *BCE* = Before the Common Era (also written *BC*, "before Christ")

Sample Material © Pearson 2023

5 In the early 1300s, the first mechanical clocks—machines that measured and told the time—appeared in public buildings in Italy. Around 1500, a German inventor, Peter Henlein, invented a mechanical clock that was powered by a spring.[4] Now clocks were getting smaller and easier to carry, but they still were not very accurate. Then in 1656, the Dutch scientist Christiaan Huygens invented a clock that was a big step forward. This was the first pendulum clock.[5] A pendulum moves from side to side, again and again, at a constant rate. Counting the movements of a pendulum was a better way to keep time. Huygens's first pendulum clock was accurate to within one minute a day.

6 Developments in clock technology continued as the **demand** for clocks increased. Clocks were needed for factories, banking, communications, and **transportation**. Today, much of **modern** life happens at high speed and depends on having the **exact** time. We must also have international agreement on what the exact time is.

7 Now we have atomic clocks, the best of which are accurate to about one-tenth of a nanosecond[6] a day. But even with these **high-tech** clocks, we still measure a year by the time it takes the earth to go around the sun, just as people did long, long ago.

8 We say that it takes the earth 365 days for a trip around the sun, but that is not exactly true. A year is actually a little longer—365.242 days (or 365 days and almost six hours). So we generally add a day, February 29, every fourth year, and we call those years *leap years*. However, this creates another problem. The extra hours in four years actually add up to less than one day, so adding a day every fourth year would give us too many days. So when a year ends in –00 (like 1800, 1900, or 2000, for example), we don't always make it a leap year. We do it only when we can evenly divide the year by 400, as in 1600 and 2000. Remember that when you set your watch for the year 2100!

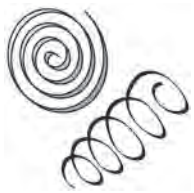

[4] *two springs*

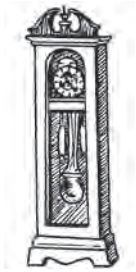

[5] *A grandfather clock is an example of a pendulum clock.*

[6] *a nanosecond* = 1/1,000,000,000 (one-billionth) of a second

Quick Comprehension Check

A. Read these statements **about the reading**. Circle T (true) or F (false). On the line, write the number of the paragraph with the answer.

1. People first measured time by the sun, moon, and stars. T F ____
2. We no longer use the sun in measuring time. T F ____
3. People invented ways to tell time so they would know when to meet. T F ____
4. People didn't have very accurate clocks until about 350 years ago. T F ____

Sample Material © Pearson 2023

5. Knowing the exact time is more important today than it was long ago. T F ____

6. The earth takes exactly 365 days to circle the sun. T F ____

B. Work with your class. Share your answers from part A. Go back to the reading to find the reason why a statement is true or false. Correct the false statements.

EXPLORING VOCABULARY

Thinking about the Target Vocabulary

A. Look at the chart with the target vocabulary from "A History of Telling Time." Four nouns and five adjectives are missing. Scan the reading to find them, and add them to the correct places in the chart. Use the singular form of any plural noun.

¶	Nouns	Verbs	Adjectives	Other
1		measure		
2		attend		
		set		
3				
				fairly
4			accurate	
6				
7			high-tech	

Vocabulary Tip: *Measuring* in paragraph 1 is a **gerund**. A gerund is the *-ing* form of a verb, but it acts like a noun.

B. Which words are new to you? Circle them in the chart. Then find them in the reading. Look at the context. Can you guess the meaning?

Sample Material © Pearson 2023

Understanding the Target Vocabulary

A. These sentences are **about the reading**. Complete them with the words in the box.

advanced	fairly	set	technology
demand	modern	shadow	transportation
exact	rate		

1. Thousands of years ago, people began developing _____ for telling time. That is, they developed tools and skills for this purpose.
2. The first ways to tell time that people invented were simple compared to the ways we use today. Today we have much more _____ technology.
3. Six thousand years ago, when people in North Africa and the Middle East began to organize religious and social activities, they needed to agree on when these events would happen. They had to _____ times to come together for these events.
4. The Egyptians were the first to tell time by the movement of an obelisk's _____ (a darker area made by blocking sunlight).
5. Using an obelisk to tell time worked _____ well. It wasn't great, but it was better than nothing.
6. The need for clocks increased in part because more and more people were traveling and sending goods from one place to another. Advances in _____ meant that it became more important to know the correct time.
7. A sundial will give you a general idea of the time, but today's high-tech clocks can tell you the _____ time.
8. The reading says that " _____ life" is fast-moving. This phrase refers to the way people live now or have lived in recent times.

Vocabulary Tip: *Technology* can also mean "advanced machines and ways of doing things based on science and the use of computers."

Sample Material © Pearson 2023

B. These sentences are also **about the reading**. What is the meaning of each **boldfaced** word? Circle a, b, or c.

1. We use clocks to **measure** time. *Measure something* means
   a. use and enjoy it. b. find out the size or amount of it. c. notice it.
2. If people want to **attend** an event, they have to know what time to be there. *Attend an event* means to
   a. sign up for it. b. be present for it. c. organize it.
3. The stones on the ground around an obelisk marked **equal** periods of time. *Equal* means
   a. daylight. b. short. c. the same.
4. Obelisks were not **portable**. *Portable* means
   a. able to be carried. b. nice to look at. c. of high quality.
5. Water clocks and hourglasses were not very **accurate**. We call a clock *accurate* when it
   a. costs very little. b. tells time correctly. c. can be carried easily.
6. The **demand** for accurate clocks increased with advances in communications, banking, and transportation. *Demand* means
   a. need. b. limit. c. risk.
7. Today we have **high-tech** clocks, like atomic clocks. *High-tech* means
   a. fairly accurate. b. beautifully designed. c. using advanced technology.

EXPANDING VOCABULARY

Building on the Vocabulary

Word Grammar: Using *Port* to Form Words

The **root** of the words *portable* and *transportation* is *port*. It comes from a Latin word meaning "carry." Something that is portable is something you can carry. The verb form is *transport: We transported the computers by truck.*

Complete the sentences. Use your own ideas.

1. The first _____ were not portable, but now people can buy portable ones.

Sample Material © Pearson 2023

2. Modern transportation includes _____, _____, and _____.

3. In my country, businesses often transport goods by _____.

Using the Target Vocabulary in New Contexts

A. Complete the sentences with the target words in the box. There is one extra word.

advanced	exact	measuring	set
demand	fairly	modern	technologies

1. You won't believe all the things his new phone can do. It is very _____.
2. Her Spanish isn't perfect, but she speaks it _____ well.
3. The course is on _____ Chinese history, covering the last 75 years.
4. Have you _____ a date for your wedding?
5. Hannah is _____ the flour for a cake she's making. She needs 2½ cups.
6. Scientists have found that chocolate contains more than 300 chemicals. I don't know the _____ number.
7. Some people are slow to accept new _____. They would rather continue using the tools that they're used to.

Vocabulary Tip: The adjective *advanced* is related to *advance*, which can be a noun (*advances in technology*) or a verb (*trying to advance our understanding of the placebo effect*).

Vocabulary Tip: *Technology* is usually a noncount noun. When it is used in the plural, it means "types of technology."

B. Complete the sentences with the words in the box. There are two extra words.

accurate	demand	high-tech	set
attend	equal	modern	shadows

1. _____ grow longer late in the day as the sun gets lower in the sky.
2. I do the same work he does, so we should get _____ pay. Instead he earns more than I do.

Sample Material © Pearson 2023

3. A pencil is not a _____ tool. It's a very simple one.

4. He gave the police an _____ report of the accident.

5. The law says children must _____ school until a certain age.

   In most U.S. states, they can't quit school until the age of 16.

6. The price of a product or service is likely to go up if the

   _____ increases but the supply does not.

DEVELOPING YOUR READING SKILLS

Text Organization

A. How is the reading "A History of Telling Time" organized? Check (✓) your answer.

☐ 1. The writer compares and contrasts ways that different cultures measure time.

☐ 2. The writer describes developments in measuring time in chronological order.

☐ 3. The writer presents arguments for and against the idea of measuring time.

Vocabulary Tip: *In chronological order* means in time order, starting with the earliest event.

B. Find the information on these topics in the reading. Number them in chronological order from 1 (the earliest development) to 8 (the most recent).

____ a. Countries around the world had to agree on the exact time.

____ b. People measured time by the sun, moon, and stars.

____ c. Peter Henlein invented a spring-powered clock.

____ d. The Egyptian shadow clock, the first portable clock, was invented.

____ e. People used hourglasses.

____ f. Christiaan Huygens invented a pendulum clock.

____ g. The first mechanical clocks appeared in public buildings in Italy.

____ h. The Egyptians built obelisks to help them tell time.

Scanning

Read these statements about the reading. Scan the reading for the information you need to complete them.

1. People in _____ and _____ were the first to develop

   ways to tell the time of day.

Sample Material © Pearson 2023

2. People started needing clocks and setting times to meet after they developed _____ and _____.
3. Obelisks and _____ depended on the sun.
4. A _____ measured time by filling up a container with water, or emptying one out, at a constant rate.
5. The first really accurate clock was a _____ clock, invented in the year _____.
6. The best atomic clocks are accurate to _____.
7. It takes _____ days and _____ hours for the earth to circle the sun.
8. A year with 366 days is called a _____.

Understanding Reference Words

What do the **boldfaced** reference words mean in these sentences? Look back at the reading. Write your answers on the lines.

Reading Tip: Remember: A reference word usually refers the reader back to someone or something already named.

1. Paragraph 2: **They** needed some kind of clock . . . _____
_____
2. Paragraph 2: . . . and set times for **these** events. _____
_____
3. Paragraph 4: All of **them**, of course, depended . . . _____
_____
4. Paragraph 8: However, **this** creates another problem. _____
_____
5. Paragraph 8: We do **it** only when . . . _____
_____

Sample Material © Pearson 2023

CRITICAL THINKING

Discussion

Talk about these questions in a small group.

1. The reading describes a series of advances, or improvements, in time-telling technology. With each new kind of technology, people were trying to deal with a problem. Complete the chart with information about the limitations of each technology and how people tried to deal with those problems.

Technology	Problem	Solution
The obelisk	not portable	the sundial
The sundial		
The water clock, the hourglass		
The spring-powered mechanical clock		
The pendulum clock		

Vocabulary Tip: A **solution** to a problem is a way of dealing with the situation to make the problem go away.

2. The reading states, "Much of modern life happens at high speed and depends on having the exact time" (paragraph 6). Does the reading give details to support this statement? What examples can you think of to support it?
3. In paragraph 8, the reading states, "However, this creates another problem." What was the first problem? What was the solution to it? What was the new problem? How has that problem been solved?
4. When is it important to be on time? How important is it? If a friend is supposed to meet you, but he or she is late, how long are you likely to wait?
5. Although we need international agreement on what time it is, not everyone marks time by the same calendar. What examples can you give of calendars used by various cultures? What do you know about each one?

Critical Thinking Tip: When a writer introduces a problem, read to find out what solution, or solutions, the writer presents.

Sample Material © Pearson 2023

WRITING

A. Use the Target Vocabulary: Choose five of the target words or phrases from the chart on page 113. On a piece of paper, use each word or phrase in a sentence and underline it. Find a partner and read each other's sentences.

B. Practice Writing: Choose one of these topics and write a paragraph about it. Then find a partner and read each other's paragraphs.

1. There are many popular sayings about time in English— for example, "Time is money" and "Time flies when you're having fun." Give your opinion of one of these sayings, or explain a saying from your first language that refers to time.
2. Write about question 4 from **Discussion**: When is it important to be on time? How important is it? If a friend is supposed to meet you, but he or she is late, how long are you likely to wait?

Writing Tip: When you write an opinion paragraph, explain the reasons for your opinion.

Sample Material © Pearson 2023

CHAPTER 10

The Screen vs. the Printed Page

Readers have choices in technology.

LEARNING OUTCOME

› Learn about how technology can affect reading and learning

GETTING READY TO READ

Talk about these questions with your class.

1. When do you read on a screen? List the kinds of technology you use and the kinds of things you read on a screen (materials for school, text messages, etc.).
2. When do you read on a printed page? List the types of printed materials you read (books, newspapers, etc.) and the kinds of things you read in them (materials for school, news reports, etc.).
3. Sometimes you can choose how to read something—on a screen or on a printed page. When you have a choice, what do you choose? Why?

Sample Material © Pearson 2023

READING

Read to Find Out: How does reading a text on a screen compare with reading it on paper?

Look at the words and definitions next to the reading. Then read without stopping. If you see a new word, try to understand the sentence without it. You will learn the word later.

The Screen vs. the Printed Page

1 We do a lot of reading on screens these days: on computers, smartphones, and other kinds of **electronic** devices.[1] Is reading on a screen a different experience from reading on a printed page? Most people would say yes, but is it different in a way that matters? **In particular**, are there differences for someone who's reading not just for fun but to learn? Most college students today, **at least** in the United States, are reading some if not all of their course materials on a screen because electronic **resources** have begun to **replace** printed texts. So these students need to know: Is one kind of reading better than the other when it comes to[2] understanding and remembering what you read?

2 Since the 1980s, over a hundred studies have been **carried out** to see if the technology you use changes how you read. Scientists have tried to find whether the brain **responds** differently to onscreen text than to words on paper. **So far**, the research has had mixed results. However, people generally seem to do a little better when they read a text—especially a long one—on a printed page rather than on a screen. That is, they do a little better on tests of how well they have understood and can remember what they read.

3 One reason for this may be the physical properties[3] of books. When you open a book, you see a page on the left and a page on the right. The four corners on each page give you a sense of where you are as you read. It's also easy to see where you're going because at all times, you can see how long the book is and where you are in it. That helps you make a mental map of the text. Every piece of information in the book has its home address, so to speak,[4] and when readers want to return to a particular piece of information, they often remember where in the book it appeared.

4 With an electronic text, **on the other hand**, you can't see the entire text, and you can't make the same kind of mental map. You can use the search function[5] to find a particular phrase, but it's hard to see any **section** of the text in the context of the whole. This may help explain why people reading electronic texts have to use more mental energy, get tired more quickly, and don't remember as much.

[1] *an electronic device* = a hand-held piece of computerized equipment, like a tablet

[2] *when it comes to* = when you are talking about, when you are dealing with

[3] *physical properties* = qualities, features, or characteristics you can see and touch

[4] *so to speak* = used to show you're using words differently from their usual meaning

[5] *search function* = a computer program tool to help you quickly find a word, number, etc.

Sample Material © Pearson 2023

5 There also seems to be a difference in the attitude[6] that readers bring to reading on a screen. Without knowing it, many people seem not to **take it** as **seriously** as reading on paper. They spend more time scanning rather than reading, and they are more likely to read a text only once. They're also more likely to get distracted.[7] They're less likely to set goals for their reading and less likely to reread the hard parts. These **behaviors** won't help readers understand or remember what they've read.

6 Many students seem to know without being told that reading a printed page gives them something that reading on a screen does not. Studies have shown that many students print out electronic texts when they really need to understand them well. This **practice** may change as technology improves. The experience of reading on a screen may become less tiring, and it may become easier for students to mark up an electronic text the way they mark up a printed page.

7 However, you don't need to wait for technology to improve. You can go ahead and change the things that are within your control—your attitudes and behaviors. Start by giving onscreen text the attention it **deserves** if you are reading to learn. To better understand and remember what you read:

- Plan to reread the text, especially the difficult parts.
- Avoid getting distracted while you're reading, and don't multitask (do more than one thing at the same time).
- As you read, ask yourself questions about what you're learning.
- Take notes while you read and after you finish.

These are tips that apply to any kind of reading—on paper as well as on a screen—**whenever** you're reading to learn.

[6] *attitude* = the opinions and feelings someone usually has about something

[7] *get distracted* = stop paying attention to what you're doing because you notice something else

Quick Comprehension Check

A. Read these statements **about the reading**. Circle T (true) or F (false). On the line, write the number of the paragraph with the answer.

1. Scientists haven't yet studied how different technologies affect reading. T F ____
2. Many materials for U.S. college courses are electronic texts. T F ____
3. People seem to understand and remember electronic texts better. T F ____
4. People seem to be more serious about reading on a screen. T F ____

Sample Material © Pearson 2023

5. The reading contains advice for reading electronic texts. T F ____

6. The reading advises students to print out all electronic texts. T F ____

B. Work with your class. Share your answers from part A. Go back to the reading to find the reason why a statement is true or false. Correct the false statements.

EXPLORING VOCABULARY

Thinking about the Target Vocabulary

A. Look at the chart with the target vocabulary from "The Screen vs. the Printed Page." Four nouns and four verbs are missing. Scan the reading to find them, and add them to the correct places in the chart. Use the singular form of any plural noun. Use the base form of each verb.

¶	Nouns	Verbs	Adjectives	Other
1			electronic	
				in particular
				at least
2				
				so far
4				on the other hand
5				take (something) seriously
6				
7				
				whenever

B. Which words and phrases are new to you? Circle them in the chart. Then find them in the reading. Look at the context. Can you guess the meaning?

Sample Material © Pearson 2023

Understanding the Target Vocabulary

A. These sentences are **about the reading**. What is the meaning of each **boldfaced** word or phrase? Circle a, b, or c.

1. The writer of "The Screen vs. the Printed Page" discusses one type of reading **in particular**, reading to learn. *In particular* means

   a. simply. b. especially. c. possibly.

2. **So far**, studies on the effects of technology on how we read have had mixed results. *So far* means

   a. in return. b. as well. c. until now.

3. The reading describes certain **behaviors** that won't help readers understand or remember what they've read onscreen, such as reading a text only once. A behavior is something that a person

   a. believes. b. does. c. has.

4. Many students are in the habit of printing out texts to read rather than just reading them on a screen, but this **practice** may change as technology improves. A practice is something that people

   a. do repeatedly. b. announce. c. should avoid.

5. When someone has to read an educational text on a screen, the writer advises giving that text "the attention it **deserves**." If a text deserves attention, it's

   a. important. b. accurate. c. uncertain.

Vocabulary Tip: When a person deserves something, the person has earned it by his or her behavior (good or bad): *Their employees deserve better working conditions.*

B. These sentences are also **about the reading**. Complete them with the words and phrases in the box.

at least	electronic	replaced	respond	take it less seriously
carry it out	on the other hand	resources	section	whenever

1. Computers have screens, and so do smartphones and other types of _____ devices (all of which operate through the use of a computer system).

2. In paragraph 1, the writer wrote "Most college students today" but then wanted to correct that phrase, so the writer added "_____ in the United States" to make the phrase more specific, limiting "most college students" to just most *U.S.* college students.

Vocabulary Tip: *Electronic* is often shortened to *e-* and used as a prefix for a noun, as in *email* or *e-commerce* (buying and selling using the Internet).

Sample Material © Pearson 2023

3. College students have traditionally used printed textbooks, but today, they also have other types of _____ they can use to get information, such as websites and films.

4. When students use electronic resources instead of printed ones, you can say that the electronic resources have taken the place of—or _____—the printed ones.

Vocabulary Tip: The reading discusses educational resources. *Resources* is also used in these phrases: *natural resources*, *human resources*, and *financial resources*. See your dictionary for further information.

5. To find the answer to a question—such as "Is the technology we use affecting how we read?" —researchers often plan and organize a study and then _____.

6. When you see words on paper or on a screen, your brain will _____ to those words, but because of differences in the technologies, your brain's response might not be the same in each case.

7. When you read a book, it's easy to see where you are in the book. _____, when you read an electronic text, it's not so easy.

Vocabulary Tip: Use *on the other hand* to give a second fact or opinion that should be considered as well as the one you have just given.

8. When you are reading a part of a book, it's easy to see the relationship between that part and the whole text. You can see where that part is in the book and how big a part it is. With an electronic text, it's not so easy to see how the _____ you're reading relates to the whole.

9. Researchers have found that students may have a different way of thinking about the reading they do on a screen (compared with the attitude they bring to reading a textbook). Students seem to be a little more relaxed about it. In other words, they _____.

10. The advice the writer gives students for when they do onscreen reading is also good advice for reading in general—that is, at any time, or _____ , students are reading materials for their courses.

Sample Material © Pearson 2023

EXPANDING VOCABULARY

Building on the Vocabulary

Word Grammar: *Behavior, Practice,* and *Habit*

The nouns *behavior, practice,* and *habit* all refer to things people do.

- *Behavior* is the most general of the three nouns. It refers to things that a person or animal does.

  The baby-sitter was upset about the children's bad behavior.

  Someone who gets time off for good behavior gets out of prison sooner.

  Misbehavior is behavior that's bad or wrong.

- *Practice,* as used in the reading, refers to something that a person or group does often, especially a chosen way of doing something or a social or religious custom.

  The practice of raising fish for food is called aquaculture.

  Over a long period of time, a common practice can become a custom or a tradition.

- *Habit* refers to something that you do regularly or usually, often without thinking about it because you have done it so many times before. People often judge habits as good or bad.

  It's good to get into the habit of regular exercise.

  Dad's in the habit of salting his food before he even tastes it.

Complete the following sentences. Write *behavior, misbehavior, practice,* or *habit.*

1. Tom wants to break the _____ of eating fast food for lunch every day.
2. The parents were pleased with their children's good _____ during the trip.
3. The new law is designed to end the _____ of paying women less than men.
4. Children don't always behave well in class, so teachers-in-training must learn how to respond to their _____.

Sample Material © Pearson 2023

Using the Target Vocabulary in New Contexts

A. Complete the sentences with the target words and phrases in the box. There is one extra word.

at least	in particular	respond	take it seriously
deserves	on the other hand	so far	whenever
electronic	resource		

1. The team is designing a new ad and has come up with several ideas for it _____, but they're still working on more.
2. Today's _____ watches do more than just tell you what time it is.
3. My grade for the course depends on the final exam, so I need to _____.
4. The change would bring certain benefits, but _____, it would have certain costs, so we need to consider both.
5. Your idea _____ serious consideration, and I promise to think about it.
6. Spring is a wonderful season to visit that region, the month of May _____.
7. There's no major difference between the two products, _____ as far as I know.
8. Try using this website for your research—it's an excellent _____.
9. _____ someone invests money, they want to know the rate of return on their investment—that is, how much they can hope to gain over a particular amount of time.

Sample Material © Pearson 2023

B. Match the beginning and end of each sentence. Write the letters.

____ 1. We have a plan, and now we just need to

____ 2. My computer was old, so I bought a new one to

____ 3. First-class passengers on a plane sit in

____ 4. I can't control their behavior; I can only control how I

a. **respond** to it.

b. **replace** it.

c. **carry** it **out**.

d. the front **section** of it.

C. Write each target word or phrase from part B next to its definition.

Target Word or Phrase	Definition
1. =	put something new in place of (another thing)
2. =	one of the parts that something is divided into
3. =	do something in reaction to what has been said or done
4. =	do something that needs planning and organizing

DEVELOPING YOUR READING SKILLS

Text Organization

How is the reading "The Screen vs. the Printed Page" organized? Check (✓) your answer.

☐ 1. The writer describes developments in reading technology in chronological order.

☐ 2. The writer reports on research findings and then gives advice based on them.

☐ 3. The writer presents arguments for and against students reading texts on a screen.

Reading Tip: Notice how a text is organized. It can help you understand the main idea and the writer's purpose.

Sample Material © Pearson 2023

Supporting Details

Write two statements below with details that support each of the major points below. Use your own words whenever possible.

1. Researchers have been studying reading on a screen vs. reading on the printed page.

   They have done more than 100 studies since the 1980s.

   The results of the research have been mixed, but the printed page seems to make it a little easier to understand and remember what you read.

2. The physical properties of books might have something to do with making printed texts a little easier to understand and remember.

3. People seem to behave differently when they read electronic texts compared with printed texts.

4. There are things students can do to improve how well they understand and remember electronic texts.

Summarizing

A. Complete the summary of "The Screen vs. the Printed Page." Include the answers to the questions below. Try to paraphrase. Use quotation marks as needed.

What have researchers found, in general?

What might be one reason for the difference?

What difference in attitude have researchers noticed?

What reading tips does the writer offer?

Sample Material © Pearson 2023

According to "The Screen vs. the Printed Page," researchers have been studying whether people read, understand, and remember information in the same way when the text is on a screen instead of a printed page.

B. Compare your summary with a partner's. Do your summaries include the same reading tips?

CRITICAL THINKING

Discussion

Talk about these questions in a small group.

1. What is the writer's purpose in writing "The Screen vs. the Printed Page"?
2. The writer states that "most people" would say that reading on a screen is "a different experience from reading on a printed page" (paragraph 1). Is it different for you? If so, how is it different? Consider the answers you gave to the questions on page 121 about the types of materials you read using electronic devices and the types you read in books or other printed materials.
3. Have the results of all the studies described in paragraph 2 been clear and consistent? That is, have they been the same every time? How do you know? Does the writer expect that future studies will continue to show similar results? How do you know?
4. Check (✓) your answer: In paragraph 3, the writer compares the text in a book to

   ☐ a. an electronic text.

   ☐ b. a room in a house.

   ☐ c. an area you travel across.

   How do you know? For what purpose does the writer make this comparison?

Critical Thinking Tip: The purpose of a comparison may be to help the reader by showing how something new is similar to something familiar and well understood.

Sample Material © Pearson 2023

5. In paragraph 5, what attitude towards reading onscreen text does the writer describe? According to the writer, what problem behaviors does this attitude lead to? In your opinion, why would a reader be more likely to get distracted while reading on a screen? List as many reasons as you can, based on your own experience.
6. The reading says that as technology improves, "it may become easier for students to mark up an electronic text the way they mark up a printed page" (paragraph 6). What is the purpose of marking up a text? In what ways can someone mark up printed pages? In what ways can someone mark up electronic texts? How do *you* mark up a text—printed or electronic—when you are reading to learn?

WRITING

A. Use the Target Vocabulary: Choose five of the target words or phrases from the chart on page 124. On a piece of paper, use each word or phrase in a sentence and underline it. Find a partner and read each other's sentences.

B. Practice Writing: Choose one of these topics and write a paragraph about it. Then find a partner and read each other's paragraphs.

1. Which piece of advice the writer gives for reading electronic texts do you think is most important? Why? Which one is the most difficult to do? Why?
2. What's different when you read to learn compared with how you read outside of school? How are the materials you read different? How is your behavior different?

Writing Tip: Before you write a comparison, get ready to write by making a chart with two columns. At the top, write the two things you're going to compare. Make notes comparing them side by side.

Sample Material © Pearson 2023

CHAPTER 11

Appropriate Technologies

*Keeping vegetables fresh in a cooler made from two clay pots with wet sand in between**

LEARNING OUTCOME

› Learn about technology for developing countries

GETTING READY TO READ

Talk about these questions with a partner.

1. What percentage of the people in the world do you think have no electricity?
   a. less than 10% b. about 18% c. about 33%
2. Do you know the phrases *developed countries* and *developing countries*?

   Read the definitions and list some examples of each.

   developed countries = countries with many industries, comfortable living for most people, and (usually) governments chosen by the people

   Examples: _____

   _____

   developing countries = countries without much industry that are working to improve their people's lives

   Examples: _____

   _____

* Developed by Mohammed Bah Abba of Nigeria for use in hot, dry places with no electricity.

Sample Material © Pearson 2023

READING

Read to Find Out: What are appropriate technologies?

Look at the pictures, words, and definitions next to the reading. Then read without stopping. If you see a new word, try to understand the sentence without it. You will learn the word later.

Appropriate Technologies

1 You are probably reading this book in a developed country. So when you hear the word *technology*, you are likely to think of computers, high-tech phones, cars, and so on. People who live in such countries can look forward to new and better **models** of all these products each year. Modern technology has made life in developed countries much easier. Technology can make life easier in developing countries, too, but it has to be technology of another kind because the needs in those countries are very different. About 1.2 billion people—almost one-fifth of the people on Earth—don't even have electricity. What they need is technology that is **appropriate** for their situations. That is, they need technology that will help them meet basic needs for food, water, clothes, housing, health services, and ways to make a living.

2 The phrase *appropriate technologies* means types of technology that

- use materials available in the local area;
- can be understood, built, and repaired by the people who use them;
- bring communities together to **solve** local problems.

3 Some appropriate technologies are beautifully simple. For example, a project in Sri Lanka is using sunlight to make drinking water safe. Clear bottles are filled with water and placed in the sun for six hours. That is usually enough time for the sun to heat the water and kill germs.[1] If the weather is cool or cloudy, it takes two days. This **method** has been proven to help people stay healthier.

4 Amy Smith is a U.S. inventor with a passion[2] for designing appropriate technologies. Smith studied **engineering** at Massachusetts Institute of Technology (MIT) and then spent four years in Botswana. She taught math, science, and English there, and she trained farmers to take care of bees so they could get honey[3] from them. In Africa, she **realized** that she could help people more by using her skills as an engineer. Smith said, "The longer I was there, the more I realized there were **plenty** of inventions that could improve the quality of life."

[1] *germs* = very small living things that can make a person sick

[2] *a passion* = a strong love

[3] *bees produce honey*

Sample Material © Pearson 2023

5 So Smith went back to MIT and started working on low-tech inventions. Her first great invention was a screenless hammermill. A hammermill is a machine that grinds **grain** into flour. Usually a hammermill needs a metal screen[4] to separate the flour from the unwanted parts of the grain. But screens often break, and they are hard to replace, so regular hammermills are not much use in **rural** Africa. Women there often end up grinding grain by hand and spending hours each day doing it. Smith's invention does not need a screen. It is cheap to build, simple to use, easy to repair, and it does not need electricity. With this machine, a woman can grind as much grain in a minute as she used to do in an hour.

[4] *a screen* = a wire net that lets only air or very small things pass through

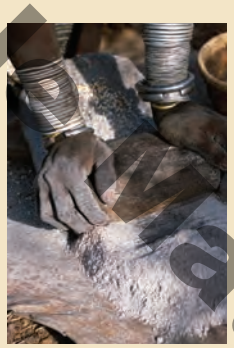

Grinding grain by hand

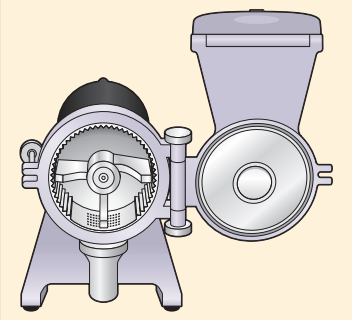

Amy Smith's screenless hammermill

6 Smith's invention has been a great success in Africa, but some other ideas that people have tried have not done so well. In northern Ghana, another project designed to help women failed partly for cultural reasons. The women in that area do most of the farming, and they spend a lot of time and energy walking to and from their farms. Most of the time, they carry heavy **loads** on their heads. They are very much in need of a better way to transport farm products, tools, water, and so on. Because bicycles are popular in the region, a bicycle trailer seemed to be a good solution to the problem. The trailer was like a shopping cart[5] but had two wheels and was **attached** to the back of a bike. However, the idea didn't work. For one thing, it's the men in northern Ghana, not the women, who own and ride bicycles. In addition, the type of bicycle offered to the women was a bicycle with a crossbar.[6] A woman wearing a dress, as is traditional there, cannot ride such a bicycle. For these reasons, the idea of using a bicycle trailer failed.

[5] *a shopping cart*

[6] *a bicycle with a crossbar*

7 Amy Smith and others continue to work on new technologies that are appropriate for developing countries. However, they must try to develop technologies that don't depend on electricity, since so many of these countries don't have it. Everyone would **be better off** if they had not only good low-tech technologies but also electricity. That would open the door to advances in education and communication, and it would let doctors store medicines that must stay cold. It's true that the **production** of electricity sometimes causes **pollution**, but creative[7]

[7] *creative* = very good at thinking of new ideas and ways to do things

Sample Material © Pearson 2023

engineers could solve that problem. They could find ways to produce it without hurting **the environment**, perhaps by using energy from the sun, wind, or water.

8 Of course, the problems of developing nations cannot all be solved by thinkers like Amy Smith, but many can. As she says, "Technology isn't the only solution, but it can certainly be part of the solution."

Quick Comprehension Check

A. Read these statements **about the reading**. Circle T (true) or F (false). On the line, write the number of the paragraph with the answer.

1. *Appropriate technologies* means the most modern, high-tech machines. T F ____
2. The same technology will not work everywhere. T F ____
3. Amy Smith is an engineer and an inventor. T F ____
4. Culture can influence how people use or feel about new technology. T F ____
5. Only a few people in the world still don't have electricity. T F ____
6. Electricity would not help developing countries. T F ____

B. Work with your class. Share your answers from part A. Go back to the reading to find the reason why a statement is true or false. Correct the false statements.

EXPLORING VOCABULARY

Thinking about the Target Vocabulary

A. Look at the chart with the target vocabulary from "Appropriate Technologies." Nine nouns are missing. Scan the reading to find them, and add them to the correct places in the chart. Use the singular form of any plural noun.

¶	Nouns	Verbs	Adjectives	Other
1				
			appropriate	
2		solve		
3				

Sample Material © Pearson 2023

¶	Nouns	Verbs	Adjectives	Other
4				
		realize		
5				
			rural	
6				
		attach		
7				be better off

B. Which words and phrases are new to you? Circle them in the chart. Then find them in the reading. Look at the context. Can you guess the meaning?

Understanding the Target Vocabulary

A. These sentences are **about the reading**. What is the meaning of each **boldfaced** word or phrase? Circle a, b, or c.

1. Each year, carmakers produce new **models** of cars. *Models* means
   a. customers. b. habits. c. types or designs.
2. When the people in a community share a problem, they need to work together to **solve** it. When you solve a problem, you
   a. find an answer to it. b. increase it. c. first notice it.
3. Some people in Sri Lanka use a simple **method** for making their drinking water safe. *Method* means
   a. a planned way of doing something b. an explanation for something. c. a bad habit.
4. After living and working in Botswana for a while, Amy Smith **realized** that she could use her skills to invent new machines and processes. When you realize something, you
   a. truly deserve it. b. suddenly understand it. c. completely block it.

Sample Material © Pearson 2023

5. Smith realized there were **plenty of** inventions that could improve the lives of Africans. If you have plenty of something, you have

   a. a small amount of it.
   b. enough or more than enough of it.
   c. an exact amount of it.

6. There is little modern technology in **rural** Africa. *Rural* means relating to

   a. country areas, not the city.
   b. expensive goods.
   c. high-tech inventions.

7. Someone in Ghana tried to solve a problem by **attaching** trailers to back of bicycles. When you attach one thing to another, you

   a. replace them.
   b. connect them.
   c. trick them.

8. Water power is often used in the **production** of electricity. *The production of something* means

   a. the investment in it.
   b. the influence of it.
   c. the process for making it.

9. Clean ways to make electricity do not hurt **the environment**. *The environment* means

   a. all our land, water, and air.
   b. people's lifestyles.
   c. types of transportation.

Vocabulary Tip: *The environment* has a particular meaning, but you can use *environment* to mean the people and things around you, as in *a happy home environment.*

B. Read each definition and look at the paragraph number. Look back at the reading on pages 134–136 to find the **boldfaced** target word or phrase to match the definition. Write it in the chart.

Definition	Paragraph	Target Word or Phrase
1. right for a certain purpose, situation, or time	1	
2. the work of designing and building machines, roads, bridges, etc.	4	
3. seeds of plants such as rice, corn, or wheat that are used for food	5	
4. amounts of things that are carried by a person, animal, truck, etc.	6	
5. be richer, more comfortable, or more successful	7	
6. dangerous amounts of dirt or chemicals in the air, water, etc.	7	

Vocabulary Tip: Engineering is a kind of professional work. It includes chemical, civil, electrical, or mechanical engineering. The person who does this work is an engineer.

Sample Material © Pearson 2023

EXPANDING VOCABULARY

Building on the Vocabulary

Word Grammar: The Suffix *–tion*

The suffix *-tion* is often used to make a verb into a noun. Study these examples. Notice that all these verbs drop the final *–e* before adding the suffix, and sometimes there are other spelling changes, too.

Check your dictionary when you aren't sure if a verb has a related noun form.

Verb	Noun
pollute	pollution
produce	production
realize	realization
solve	solution

Complete the sentences. Use the nouns and verbs from the chart.

1. When you _____ a problem, you come up with a _____.
2. When we _____ the air, water, or land, we create environmental _____.
3. "_____" can mean the process of making or growing things, or it can mean the amount of things that you _____.
4. If you _____ something that you weren't aware of before, then you suddenly come to a _____.

Sample Material © Pearson 2023

Using the Target Vocabulary in New Contexts

Complete the sentences with the target words in the box. There is one extra word.

appropriate	engineering	method	realize
attach	grain	models	rural
be better off	loads	plenty	the environment

1. He lives on a farm in a quiet _____ area.
2. Whole _____ breads are better for you because they use every part of the seed.
3. You can get a TV at SuperBuy. There are lots of _____ to choose from.
4. I like her _____ of cooking rice. It has just a few simple steps.
5. There's no need to rush—we have _____ of time.
6. If there are no seats on the bus, then we'd _____ waiting for the next one.
7. The company had to stop using chemicals that were bad for _____.
8. It's important to wear something _____ to a job interview.
9. Students often carry heavy _____ of books in backpacks.
10. When I send an email or a text message to a friend, I sometimes _____ a photo.
11. The work of designing computer hardware and software is called computer _____.

Vocabulary Tip: The opposite of *rural* is *urban*: *Urban areas usually have better public transportation than rural areas.*

Sample Material © Pearson 2023

DEVELOPING YOUR READING SKILLS

Problem and Solution

Reread "Appropriate Technologies." Underline each problem and each solution described in the text. Then use information from the text to complete the chart.

Reading Tip: Before you reread, review the reading tips in the passage on page 123.

Problem	Solution Described	Has the problem been solved?	
		Yes	No
1. basic needs not met in developing countries	appropriate technologies		✓
2. unsafe drinking water in Sri Lanka			
3. long hours grinding grain in rural Africa			
4. no transportation for farmers in Ghana			
5. little electricity in developing nations			

Cause and Effect

Complete each sentence about the reading.

1. Developing countries need appropriate technologies because _____ _____.
2. People in Sri Lanka put bottles of water in the sun because _____ _____.
3. Amy Smith's screenless hammermill can be called an appropriate technology because _____ _____.
4. The women in Ghana did not use the bicycle trailers because _____ _____.

Sample Material © Pearson 2023

Supporting Details

Write two statements with details that support each of the major points below.

1. *Technology* means different things to people depending on where they live.

   To people in developing countries, technology means ways to meet basic needs.

   To people in developed countries, technology means high-tech inventions like computers and cars.

2. Appropriate technologies do not depend on high-tech machines or processes.

   _____.

3. Bringing electricity to developing countries could have both good and bad effects.

   _____.

4. Technology can make people's lives easier.

   _____.

CRITICAL THINKING

Discussion

Talk about these questions in a small group.

1. What are people's basic needs, as described in the reading? How would electricity help people in developing countries meet those needs? What technology does the writer say would help them? What other technology would you add to the list?

Sample Material © Pearson 2023

2. The reading gives three examples of efforts to use appropriate technology. In which two cases did the technology succeed? Why did it succeed? Where did it fail? What made the difference between success and failure?
3. How did Amy Smith know that women in rural Africa had a problem that she might be able to solve? How would you describe Amy Smith? Cite evidence from the reading to support your ideas.
4. In paragraph 8, the writer states, "Of course, the problems of developing nations cannot all be solved by thinkers like Amy Smith, but many can." Is this a fact or an opinion? Why does the writer say "Of course?" In the following sentence, the writer quotes Amy Smith. The sentence begins, "As she says." Why does the writer use this phrase?
5. Fill in the chart with examples of modern technology that you use. Write what people had to do before the invention of each type of technology.

Critical Thinking Tip: Make inferences about people you read about. Think about what they say and do, and try to understand the reasons for their actions.

Modern Technology	In the Past
1. dishwashers	People washed dishes by hand.
2.	
3.	
4.	
5.	

6. Consider each of the types of technology in your chart. Which ones would you miss the most and the least if you didn't have them? Why?

WRITING

A. Use the Target Vocabulary: Choose five of the target words or phrases from the chart on pages 136–137. On a piece of paper, use each word or phrase in a sentence and underline it. Find a partner and read each other's sentences.

B. Practice Writing: Choose one of these topics and write a paragraph about it. Then find a partner and read each other's paragraphs.

1. Return to question 6 under **Discussion**: *Consider each of the types of technology in your chart.* Write about the one you would miss the most or the one you would miss the least if you didn't have it. Explain why.
2. Write a summary of the project that failed in Northern Ghana. Imagine that you were part of the team working on this project, and describe what you would try next.

Writing Tip: When you give more than one reason for something, consider giving your most important reason last for a stronger effect on the reader.

Sample Material © Pearson 2023

CHAPTER 12

Technology in Science Fiction

Space travelers

LEARNING OUTCOME

› Learn about technology predicted by science fiction writers

GETTING READY TO READ

Talk about these questions with your class.

1. *Science fiction* means stories about future developments in science and technology and their effects on people. Sometimes these stories include travel by spaceship.[1] There have been many popular science-fiction movies set in outer space, such as *Star Wars*. What others can you name?
2. a. Look at the illustration above. What is happening in the picture?
   b. An artist created this illustration long before the age of space travel. How well did the artist imagine the future? Explain.

[1] *a spaceship*

Sample Material © Pearson 2023

READING

Read to Find Out: How well did science fiction writers predict the technology we use today?

Look at the pictures, words, and definitions next to the reading. Then read without stopping. If you see a new word, try to understand the sentence without it. You will learn the word later.

Technology in Science Fiction

1 Facts are pieces of information we can show to be true. When we read history, we want to know the facts—what really happened. Fiction is the opposite. Writers of fiction **make up** stories. These stories tell about people and events that come from the writer's **imagination**. Science fiction writers imagine not only people and events but, perhaps most importantly, technology. They often write about the effects of that technology on a person, a group, or **society**. These writers usually **set** their stories in the future. Some of them have **predicted** technology that seemed impossible at the time but really does **exist** today.

2 An Englishwoman named Mary Shelley was one of the first writers of science fiction. In 1818, she wrote the book *Frankenstein*, which tells the story of a young scientist, Dr. Frankenstein, who wants to create a human life. He puts together parts of dead people's bodies and then uses electricity to bring the creature[1] to life. However, he cannot control the creature, and it kills him. Since then, the idea of a "mad scientist" (someone who tries to use science and technology to gain power) has been very popular in science fiction, especially in science fiction movies.

3 In 1863, the French writer Jules Verne finished his first novel, *Cinq Semaines en Ballon* (*Five Weeks in a Balloon*), one of his many great science fiction **adventure** stories. It tells of three men traveling across Africa by hot-air balloon.[2] Readers loved it, but many were **confused**: Was it fact or fiction? The story sounded unlikely, but the writer's **style** and the **scientific** details made it seem true.

4 Later that same year, Jules Verne wrote *Paris au Vingtième Siècle* (*Paris in the Twentieth Century*), a story he set in the 1960s, almost 100 years into the future. This story has **descriptions** of high-speed trains, gas-powered cars, electronic devices, skyscrapers,[3] and modern methods of communication. Verne imagined all these things at a time when **neither** he **nor** anyone else in Paris had even a radio! In another book, *De la Terre à la Lune* (*From the Earth to the Moon*, 1865), he predicted that people would travel into outer space and walk on the moon, a prediction that came true on July 20, 1969. Verne even got some

[1] *a creature* = a living thing (but not a plant)

[2] *a hot-air balloon*

[3] *a skyscraper* = an extremely tall building

Sample Material © Pearson 2023

of the details right. Both in his book and in real life, there were three astronauts[4] making the flight to the moon, their spaceship **took off** from Florida, and they came down in the Pacific Ocean on their return.

5 Space travel continued to be a popular subject for science fiction in the twentieth **century**. The best writers based the science and technology in their stories on a real understanding of the science and technology of their time. Computers, robots,[5] and genetic engineering[6] all appeared in the pages of science fiction long before they appeared in the news.

6 The following quotation comes from a story by the great science fiction writer Isaac Asimov. He wrote these words in 1954. When you read them, remember that at that time, there were no home computers. In fact, the few computers that existed were as big as some people's homes. In this story, called "The Fun They Had," Asimov describes a child of the future using a personal computer to learn math:

7 Margie went into the schoolroom. It was right next to her bedroom, and the mechanical teacher was on and waiting for her. . . .

8 The screen was lit up, and it said: "Today's arithmetic lesson is on the addition of proper fractions. Please insert yesterday's homework in the proper slot."

9 Margie did so with a sigh. She was thinking about the old schools they had when her grandfather's grandfather was a little boy. All the kids from the whole neighborhood came, laughing and shouting in the schoolyard, sitting together in the schoolroom. . . .

10 And the teachers were people. . . .

11 Back in 1954, readers probably found Asimov's story hard to believe. Today, his ideas do not seem so strange, do they? Asimov, Jules Verne, and others made some accurate predictions. Does that suggest that we should pay more attention to what sci-fi writers are saying today about the world of tomorrow? Perhaps, but we should also remember that such predictions have been wrong more often than right. Here we are in the twenty-first century without flying cars or vacations on the moon, and **in spite of** computers, the Internet, and online courses, people still do go to school.

[4] *an astronaut* = someone who travels and works in outer space

[5] *a robot*

[6] *genetic engineering* = the science of changing the genes of living things

Sample Material © Pearson 2023

Quick Comprehension Check

A. Read these statements **about the reading**. Circle T (true) or F (false). On the line, write the number of the paragraph with the answer.

1. People began writing science fiction in the 1900s. T F ____
2. Science fiction is often about the technology of the future. T F ____
3. The predictions of science fiction writers have generally been correct. T F ____
4. The story of Frankenstein describes an appropriate use of technology. T F ____
5. Jules Verne imagined technology that was later invented. T F ____
6. More than sixty years ago, one writer imagined computers replacing schools and teachers. T F ____

B. Work with your class. Share your answers from part A. Go back to the reading to find the reason why a statement is true or false. Correct the false statements.

EXPLORING VOCABULARY

Thinking about the Target Vocabulary

A. Look at the chart with the target vocabulary from "Technology in Science Fiction." Six nouns and two adjectives are missing. Scan the reading to find them, and add them to the correct places in the chart. Use the singular form of any plural noun.

¶	Nouns	Verbs	Adjectives	Other
1		make up		
		set		
		predict		
		exist		

Sample Material © Pearson 2023

¶	Nouns	Verbs	Adjectives	Other
3				
4				
				neither ... nor
		take off		
5				
11				in spite of

B. Which words or phrases are new to you? Circle them in the chart. Then find them in the reading. Look at the context. Can you guess the meaning?

Understanding the Target Vocabulary

A. These sentences are **about the reading**. Complete them with the words and phrases in the box.

description	imagination	neither . . . nor	scientific	style
exist	in spite of	predicted	set	took off

1. The people and events in fiction come from the writer's _____ (his or her ability to think of new ideas or form mental pictures).
2. Science fiction writers sometimes have their stories take place in the present, but they have often _____ them in the future, sometimes with the action happening in outer space.
3. Writers have imagined technologies of the future and described them in their stories. They have _____ technologies that had not yet been invented.

Vocabulary Tip: The noun form of *predict* is *prediction*: *Good readers make predictions, before they read and as they read, about what the text will say.*

Sample Material © Pearson 2023

4. There were no computers or robots when science fiction writers first described them in their stories. Of course, computers and robots do _____ today.
5. The way that Jules Verne wrote and told his stories—in other words, his _____ of writing—made them seem true.
6. Verne made readers believe his stories by including information about science. His stories were full of _____ details that sounded true.
7. Verne wrote a story in which he described Paris 100 years into the future. In the story, he gave a _____ of what Paris would be like at that time.
8. Verne used his imagination to write about advanced technology. He didn't have any such technology himself. In fact, _____ he _____ anyone in Paris had even a simple radio, much less a phone or a car.
9. In both the book *From the Earth to the Moon* (published in 1865) and in real life (the United States' Apollo 11 mission of 1969), the astronauts _____ from Florida. That is, their spaceships went up into the air from Florida.
10. Some people expected computers to replace teachers and classrooms. However, computers have not done that. _____ computers, people still go to school.

Vocabulary Tip: Use *in spite of* + something that could have a negative effect or block an action or event: *We went for a walk in spite of the rain.*

B. These sentences are also **about the reading**. What is the meaning of each **boldfaced** word or phrase? Circle a, b, or c.

1. Writers of history shouldn't **make things up**, but writers of science fiction always do. *Make something up* means
   a. report it. b. invent it. c. prove it.
2. Science fiction often deals with the effects of future technology on **society**. *Society* means
   a. the author. b. machines. c. people in general.

Sample Material © Pearson 2023

3. Jules Verne's science fiction stories are full of danger and **adventure**. *Adventure* means

   a. rural communities. b. goods and services. c. exciting experiences.

4. Readers of *Five Weeks in a Balloon* were **confused**. *They were confused* means that they

   a. didn't know what to believe. b. didn't like the book. c. didn't want the story to end.

5. Science fiction books and movies were popular during the twentieth **century**. A century is

   a. a period of 100 years. b. a lifetime. c. a lifestyle.

Vocabulary Tip: Use *confused* to describe how someone feels: *His listeners felt confused.* Use *confusing* to describe the thing that confuses: *a confusing explanation.*

EXPANDING VOCABULARY

Building on the Vocabulary

Word Grammar: *In Spite of* and *Despite*

The phrase ***in spite of*** and the preposition ***despite*** are synonyms. After either one, you can use:

- a noun: *The soccer game continued in spite of the rain and wind.*
- a pronoun: *We knew the risks but went ahead with the plan despite them.*
- a gerund (the *-ing* form of a verb used as a noun): *I went to class in spite of feeling sick.*

Write three statements using *in spite of* and *despite*.

1. _____.
2. _____.
3. _____.

Using the Target Vocabulary in New Contexts

A. Complete the sentences with the target words in the box. There are two extra words.

adventure	descriptions	made up	society
century	exists	predicted	style
confused	imagination	set	took off

1. Jules Verne died in 1905, more than a _____ ago.
2. The actor didn't like his name, so he _____ another.

Sample Material © Pearson 2023

3. Some people enjoy taking risks. They want exciting experiences. They go looking for _____.
4. We _____ that they would solve the problem, and they soon did.
5. She told her students to use their _____ to find a solution.
6. The time and place where a film or story is _____—that is, when and where the action takes place—is called its setting.
7. _____ expects people to obey the law and respect the rights of others.
8. The twins look so much alike that I can't be sure who's who. I get _____.
9. We've solved the problem. It no longer _____.
10. The plane _____ from Madrid several hours ago. In a little while, it will land in Mexico City.

Vocabulary Tip: *Imagination* and the verb *imagine* are related to the adjective *imaginary*, meaning "not real, existing only in the mind:" *Children sometimes have imaginary friends.*

B. Match the beginning and end of each sentence. Write the letters.

____ 1.	I like the **style** of	a. expression meaning water.
____ 2.	H_2O is a **scientific**	b. of the car that hit ours.
____ 3.	We gave the police a full **description**	c. decreased—they've stayed exactly the same.
____ 4.	Sales have **neither** increased **nor**	d. that jacket but not the color.

C. Write each target word from part B next to its definition.

Target Word		Definition
1.	=	not (this) and not (that) either
2.	=	the way something is made or done
3.	=	relating to science or using its methods
4.	=	a piece of writing or speech giving details of what someone or something is like

Sample Material © Pearson 2023

DEVELOPING YOUR READING SKILLS

Scanning

Scan the reading to find the titles below. Number them in chronological order. Add the author's name and the date for each work.

	Title	Author	Date
	a. "The Fun They Had"		
	b. *Cinq Semaines en Ballon (Five Weeks in a Balloon)*		
	c. *Paris au Vingtième Siècle (Paris in the Twentieth Century)*		
	d. *De la Terre à la Lune (From the Earth to the Moon)*		
	e. *Frankenstein*		

Writing Tip: Use italics for titles of books and films (or underline them if you are writing by hand). Use quotation marks around titles of stories or articles.

Paraphrasing

Reread "Technology in Science Fiction." Then read the quotations from the text. Choose the correct paraphrase.

1. "Science fiction writers imagine not only people and events but, perhaps most importantly, technology" (paragraph 1).
   - ☐ a. Science fiction writers make up stories, but a key thing they do is think of new technology.
   - ☐ b. Science fiction is the most important way that we learn about people, events, and technology of the future.
2. "Some of them have predicted technology that seemed impossible at the time but really does exist today" (paragraph 1).
   - ☐ a. Today we have technology that was impossible even to imagine in the past.
   - ☐ b. Some sci-fi writers have been very good at imagining and predicting future technology.
3. "The story sounded unlikely, but the writer's style and the scientific details made it seem true" (paragraph 3).
   - ☐ a. Jules Verne's writing style and use of scientific details made readers wonder if his story could actually be true.
   - ☐ b. Readers didn't like Jules Verne's story, but they believed it because of the style and the scientific details.

Sample Material © Pearson 2023

4. "Here we are in the twenty-first century without flying cars or vacations on the moon . . ." (paragraph 11).

   ☐ a. Twenty-first century technology so far has been a disappointment in many ways.

   ☐ b. Many predictions that science fiction writers have made have not come true.

Summarizing

A. Complete the summary of "Technology in Science Fiction." Include answers to the following questions.

- Who was one of the first writers of science fiction?
- Who was Jules Verne?
- What were some of the things that Jules Verne accurately predicted in his stories?
- What happened with science fiction during the twentieth century?

The reading "Technology in Science Fiction" starts with a definition of "science fiction." Science fiction stories come from the writer's imagination, they often deal with the effects of technology on people, and they are usually set in the future.

B. Compare your summary with a partner's. Do you agree on what happened with science fiction during the twentieth century?

CRITICAL THINKING

Talk about these questions in a small group.

1. In paragraph 1, the reading states that science fiction writers often write about the effects of technology "on a person, a group, or society." What examples of this type of science fiction are described in the reading? In those stories, who is affected by a particular type of technology, and how are they affected?

Sample Material © Pearson 2023

2. In 1863, readers were confused by Jules Verne's story about three adventurers crossing Africa by hot-air balloon. Readers didn't know whether to believe it. According to the writer, why were they confused? Do you think that someone reading science fiction today would feel the same confusion, about what was fact and what was fiction? Explain.
3. The title of Isaac Asimov's story is "The Fun They Had." Who are "They?" How do you know? How does this title help the reader understand what is happening in the story?
4. The paragraphs from "The Fun They Had" contain words that you may not know. Answer these questions about the story using the context to guess word meanings.
   a. The reading states, "Asimov describes a child of the future using a personal computer to learn math." On the computer screen, Margie can read these words:

      Today's arithmetic lesson is on the addition of proper fractions.

      Which words are related to math?
   b. The computer tells Margie to "insert yesterday's homework in the proper slot." A slot is a long, narrow opening in a surface. (We sometimes put letters into a mail slot or money into a coin slot.) What is the meaning of *insert*? What about *proper*?
   c. Margie put her homework into the computer "with a sigh." What is the meaning of *sigh*?

      ☐ a big smile ☐ an angry word ☐ a sad or tired sound
5. How does Margie feel about the way education has changed since the school days of her grandfather's grandfather? What clues does Asimov give the reader? How do you feel about the ways technology has affected your experience as a student?
6. In paragraph 11, what predictions does the writer list that have *not* come true? Are any of them predictions you wish would come true? Explain.

Critical Thinking Tip: Writers sometimes don't give information openly but rather give the reader clues (pieces of information that help you guess the truth) so the reader can make inferences.

WRITING

A. Use the Target Vocabulary: Choose five of the target words or phrases from the chart on pages 147–148. On a piece of paper, use each word or phrase in a sentence and underline it. Find a partner and read each other's sentences.

B. Practice Writing: Choose one of these topics and write a paragraph about it. Then find a partner and read each other's paragraphs.

1. Do you like to read science fiction, or do you enjoy watching science fiction movies, either in English or in your first language? Explain how you feel about science fiction, with examples of stories or books you've read or films you've seen.
2. Become a science fiction writer! Imagine your life thirty years from now. Think especially about the technology you will use every day. Describe something from your daily life.

Writing Tip: When you write about your life in the future, start by explaining the setting: What year is it? Where are you living?

Sample Material © Pearson 2023

UNIT 3

Checkpoint

LEARNING OUTCOME

› Review and expand on the content of Unit 3

Sample Material © Pearson 2023

LOOK BACK

A. Think About This

Look back at your answers to the *Think About This* question on page 109: *How has technology changed the world?*

Do you want to change your answer? Do you want to add anything new?

B. Remember the Readings

What do you want to remember most from the readings in Unit 3? For each chapter, write one sentence about the reading.

Chapter 9: A History of Telling Time

_____

Chapter 10: The Screen vs. the Printed Page

_____

Chapter 11: Appropriate Technologies

_____

Chapter 12: Technology in Science Fiction

_____

REVIEWING VOCABULARY

Complete the phrase.

1. Write the noun *grain*, *methods*, or *shadows*.
   a. _____ of transportation
   b. fields of _____
   c. long _____ at the end of the day
2. Write the verb *attend*, *carry out*, *make up*, or *predict*.
   a. _____ stories
   b. _____ a class
   c. _____ the future
   d. _____ further research
3. Write the adjective *exact*, *modern*, or *rural*.
   a. a _____ area
   b. the _____ time
   c. _____ society
4. Write the noun *adventure*, *description*, or *technology*.
   a. a detailed _____
   b. an exciting _____
   c. advanced _____

Sample Material © Pearson 2023

EXPANDING VOCABULARY

Antonyms

Antonyms are words with opposite meanings, like *always* and *never, help* and *hurt,* or *break* and *repair.*

Sometimes a word takes a prefix that creates an antonym, like *agree* / ***dis****agree* and *happy* / ***un****happy*. These prefixes, *dis-* and *un-*, mean "not." Other prefixes that often mean "not" are *in-* and *ab-*.

Use one word from each pair of adjective antonyms to complete the sentences.

accurate	**in**accurate
appropriate	**in**appropriate
equal	**un**equal
normal	**ab**normal
predictable	**un**predictable
similar	**dis**similar

1. It's easy to guess what John is going to say or do. He's highly _____.
2. You can't wear that shirt to your job interview! It's _____.
3. Older men often lose their hair, but hair loss in a child is _____.
4. The report was full of mistakes. It was highly _____.
5. He broke the candy bar into two _____ parts and gave me the smaller one.
6. The scientists expected _____ results, and they were right: The numbers were almost exactly the same.

Sample Material © Pearson 2023

A PUZZLE

Complete the sentences with words you studied in Chapters 9–12. Write the words in the puzzle.

Across

2. He often exchanges his phone for a newer _____.
3. Let's _____ a date to have lunch together.
6. Should I _____ a photo to my job application?
7. Cars pollute, so they're bad for the _____.
9. You two are sisters? I didn't _____ that.
10. Please explain again. I'm _____.
11. Yoko got her hair cut in a new _____.
12. The staff did such a great job, they all _____ a pay raise.

Down

1. A laptop computer is smaller and more _____ than a desktop model.
3. Our seats for the play are in the orchestra _____ , close to the stage.
4. Neither Sam nor Pat was able to _____ the problem. Maybe you can help.
5. Students do well in school _____ they take their work seriously.
8. High-tech clocks _____ time very accurately.
10. We're now in the twenty-first _____.

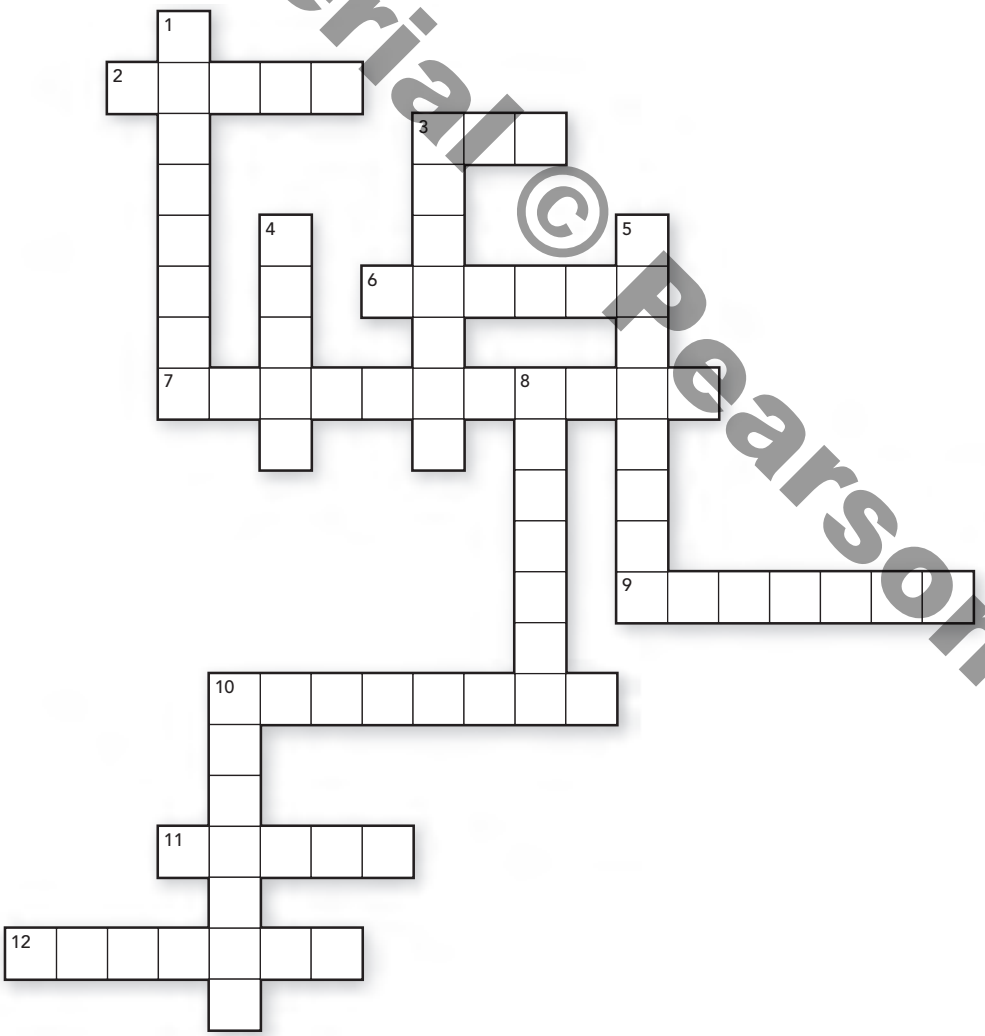

Sample Material © Pearson 2023

BUILDING DICTIONARY SKILLS

Words with Multiple Meanings

Look at the dictionary entries below. Then read each sentence and write the number of the meaning.

> **fair·ly** /ˈfɛrli/ *adv* **1** more than a little, but much less than very: *She speaks English fairly well.* | *The recipe is fairly simple.* **2** in a way that is fair and reasonable: *I felt that I hadn't been treated fairly.*

1. _____ a. Do they treat their employees fairly?

   _____ b. It was a fairly traditional wedding.

> **take off**
> **1 take** sth ↔ **off** to remove something [≠ **put on**]: *Your name has been taken off the list.* | *Take your shoes off in the house.* **2** if an aircraft takes off, it rises into the air from the ground **3** *informal* to leave a place: *We packed everything in the car and took off.* **4 take time/a day/a week etc. off** also **take time, etc. off work** to not go to work for a period of time: *I'm taking some time off work to go to the wedding.* **5** to suddenly become successful: *He died just as his film career was taking off.*

2. _____ a. The plane took off on time.

   _____ b. He was here a moment ago, but then he took off.

   _____ c. She took a month off after having her baby.

> **load**[1] /loʊd/ *n* [C] **1** a large quantity of something that is carried by person, a vehicle, etc.: *a ship carrying **a full load of** fuel and supplies.* **2 carload/truck load etc.** the largest amount or number that a car, etc. can carry: *a busload of kids.* **3** the amount of work that a machine or a person has to do: *a light/heavy **work load**.* **4** a quantity of clothes that are washed at the same time: *Can you **do a load of** clothes later today?*

3. _____ a. Her business partner is sick, so her work load has increased.

   _____ b. There's already a load in the washing machine.

   _____ c. That's a heavy load of books in your backpack!

> **de·mand**[1] / dɪˈmɑːnd / dɪˈmænd / *n* **1** [sing, U] the need or desire people have for particular goods or services, and their willingness to buy them → SUPPLY: ***Demand for** the new model is outstripping supply.* | *Nurses are **in** great **demand*** (= wanted by a lot of people) *these days.* | *The factory will have to increase production to **meet demand**.* **2** [C] a strong request that shows you believe you have the right to get what you ask for: *Union members will strike until the company agrees to their demands.* **3 demands** [plural] the difficult or annoying things that you need to do: *women dealing with **the demands of** family and career* | *The school makes heavy **demands on** its teachers.*

4. _____ a. The demands of the job were too much for him, so he quit.

   _____ b. How can we meet the demand for electricity without causing pollution?

   _____ c. They've agreed to discuss the workers' demands for safer working conditions.

Sample Material © Pearson 2023

re•source / rɪˈzɔːs, -ˈsɔːs / ˈriːsɔːrs / *n* **1** [C usually plural] something such as land, minerals, or natural energy that exists in a country and can be used in order to increase its wealth: ***natural resources*** *such as timber and oil*. **2** [C] something that can be used in order to make a job or activity easier: *an electronic resource for lesson plans*. **3 resources** [plural] all of the money, property, skill, etc. that you have available to use: *the organization's financial resources* → HUMAN RESOURCES

5. ____ a. All students should get to know the resources available at the university library.

   ____ b. John came from a family with very limited resources.

   ____ c. A nonrenewable resource is a resource that cannot be easily replaced as it is consumed, such as oil, natural gas, and coal.

least / liːst / *determiner, pron*. [the superlative of "little"] **1 at least a)** not less than a particular number or amount: *The storm lasted at least two hours*. **b)** used when mentioned an advantage to show that a situation is not as bad as it seems: *Well, at least you got your money back*. **c)** said when you want to correct or change something you have just said: *His name is Jerry. At least, I think it is*. **d)** even if nothing else is said or done: *Will you at least say you're sorry?*

6. ____ a. You'd be better off getting another job—at least, that's *my* opinion.

   ____ b. If you don't have time to call, at least send me a text.

   ____ c. I was disappointed in my grade, but at least I passed the exam.

   ____ d. They have several children—at least three, I believe.

Sample Material © Pearson 2023