Your teacher may watch to see if you can…

- follow instructions carefully
- make accurate measurements.

Introduction

The speed, frequency and wavelength of waves can be measured in different ways. The most suitable equipment for carrying out these measurements depends on the type of wave and on its speed.

Aim

To measure waves in different ways and evaluate the suitability of the equipment.

Part 1. Speed of waves on water

Method

A Set up a ripple tank with a straight dipper near one of the short sides of the tank. Fasten a ruler to one of the long sides so you can see the markings above the water level.

B Vary the current to the motor until you get waves with a wavelength about half as long as the ripple tank (so you can always see two waves).

C Count how many waves are formed in 10 s and write it down.

D Look at the waves against the ruler. Use the markings on the ruler to estimate the wavelength of the waves. If you have one, use a camera to take a photo of the waves with a ruler held just above them.

E Mark two points on the edge of the ripple tank and measure the distance between them. Use the stopwatch to find out how long it takes a wave to go from one mark to the other.

Apparatus

- ripple tank
- stopwatch
- ruler
- digital camera

⚠ Safety

Mop up any spilled water straight away

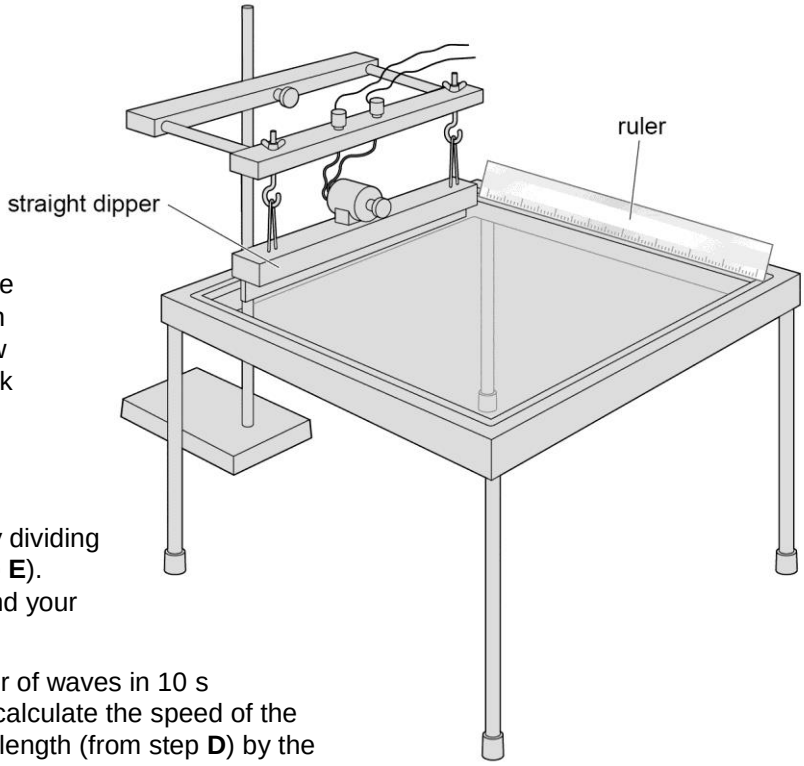

Recording your results

1 Calculate the speed of a single wave by dividing the distance by the time (both from step **E**). Make sure your distance is in metres and your time is in seconds.

2 Find the frequency by taking the number of waves in 10 s (from step **C**) and dividing by 10. Then calculate the speed of the series of waves by multiplying the wavelength (from step **D**) by the frequency you have just worked out.

Considering your results/conclusions

3 Compare your results from questions 1 and 2 with results obtained by other groups.

Evaluation

4 How easy was it to measure the frequency in step **C**? Why did you count the number of waves in 10 s?

5 How easy was it to measure the wavelength in step **D**? Why did you use a digital camera to help you?

6 How easy was it to time a single wave in step **E**? Is there any way you could improve this measurement?

Part 2. Measuring waves in a solid

Method

F Suspend a metal rod horizontally using clamp stands and rubber bands, as shown in the diagram below.

G Hit one end of the rod with a hammer. Hold a smartphone with a frequency app near the rod and note down the peak frequency.

H Measure the length of the rod and write it down. The wavelength will be twice the length of the rod.

Apparatus

- metre rule
- hammer
- 2 clamps and stands
- long metal rod
- rubber bands
- smartphone with frequency app

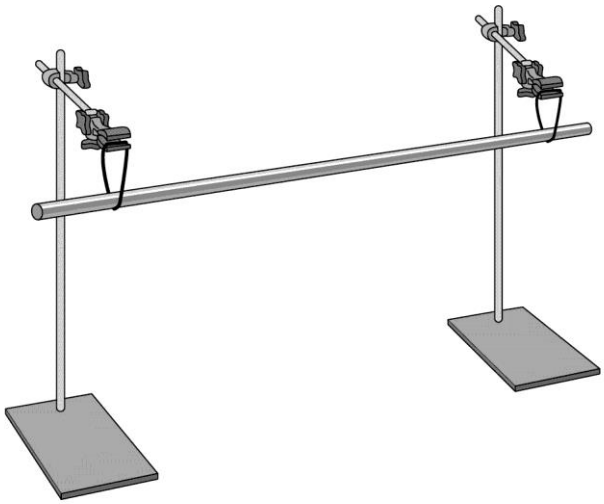

Recording your results

7 Use the frequency (from step **G**) and the wavelength (from step **H**) to calculate the speed of sound in the metal rod.

Considering your results/conclusions

8 What is the speed of sound in the material you tested?

Evaluation

9 Explain which of your measurements is the more accurate: the wavelength or the frequency.

10 Draw up a table to summarise the equipment you used for the measurements in both parts of this investigation, and how suitable the equipment was. You can use headings like this:

What was measured?	Which material was this measured for?	How was it measured?	Why was this method chosen?

11 You can measure walking speed using a tape measure and a stopwatch. Explain why these instruments are not suitable for measuring the speed of sound in a solid.